Work Order ID 91962

October-19-12 2:50:09 PM

91962

Item ID: D2938-2 **Accept** *N900040100* **Setup Start** *NS1*

Revision ID: **Stop** *NS2*

Item Name: Saddle RH Out, 206

Start Date: 10/22/12 **Start Qty:** 4.00 *4*

Required Date: 11/09/12 **Req'd Qty:** 4.00 *4*

Reference:

Cust Item ID:

Customer:

Run Start *NR1*

Stop *NR2*

Approvals: **Process Plan:** MLJ **Date:** 12-10-12 **Tooling:** _____ **Date:** _____

QC: _____ **Date:** _____ **SPC (Y/N):** _____ **Date:** _____

Sequence ID/ Work Center ID	Operation Description	Set Up/ Run Hours	Tool ID	Tool #	Plan Code	Accept Qty	Reject Qty	Reject Number	Insp. Stamp
Draw Nbr	**Revision Nbr**								
D2938	Rev C								
100		0.00							
100	HAAS CNC VERTICAL MACHINING #1								
HAAS 1	**Memo**	0.00	PD	13/01/04		4	Ø		
HAAS CNC vertical machine #1	Program part number and batch number.1-Inspect part number and batch number are programmed correctly.2-Machine Step No 1 of Folio and visually inspect as per dwg D2938 & attached Dimension Sheet 3-Machine Step No 2 of Folio and visually inspect as per								
110		0.00							
110	CONVENTIONAL MILLING MACHINE								
Mill Conv	**Memo**	0.00	PD	13/01/04		4	Ø		
Conventional Milling Machine	Machine Keyway and inspect per attached dimension sheet								
120	QC1- Inspect dimensions to dimension sheet	0.00							
120									
QC	**Memo**	0.00	PD	13/01/04		4	Ø		
Quality Control									

DQA: _____ Date: _____

NCR: Yes / No

WORK ORDER NON-CONFORMANCE / UPDATE

QA Closed: Date:

Work Order: _____

Part No. _____

NCR No. _____

DISPOSITION

- Rework ☐
- Scrap ☐
- Use-as-is ☐
- Work Order Update ☐

AGAINST DEPARTMENT/PROCESS

- Skid-tube ☐
- Machining ☐
- Thermoforming ☐
- Large Fab ☐
- Crosstube ☐
- Small Fab ☐
- Finishing ☐
- Composite ☐
- Water Jet ☐
- Prod. Eng. Coor. ☐
- Rec/Store/Packaging ☐
- Supplier ☐
- Engineering ☐
- Quality ☐
- Other ☐

Root Cause		Date	Step	Qty	Description of work order update or Non-conformance	Initial Chief Eng	Action Description	Sign & Date	Verification	QC Inspector
Doc/Data	☐									
Equip/Tooling	☐									
Operator	☐									
Material	☐									
Setup	☐									
Other	☐									
Process	☐									
Supplier	☐									
Training	☐									
Unapproved	☐									

FAULT CATEGORY

Landing Gear

- ☐ Bending
- ☐ Centre Not Concentric to O/S
- ☐ Cracks
- ☐ Crushed/Crimped
- ☐ Cuffs
- ☐ Heat Treat
- ☐ Inspection Strip in Tube
- ☐ Ripples in Bend
- ☐ Torque Waves in Extrusion
- ☐ Turning Sequence
- ☐ Wave/Twist in Tube

General

- ☐ Bend
- ☐ BOM/Route
- ☐ Broken/Damaged
- ☐ Burrs
- ☐ Contamination
- ☐ Countersink
- ☐ Cut Too Short
- ☐ Drill Holes
- ☐ Drawing
- ☐ Finish
- ☐ Folio
- ☐ Grain
- ☐ Hardware
- ☐ Inspection Incomplete
- ☐ Instructions Incomplete/Unclear
- ☐ Maintenance
- ☐ Mislabeled
- ☐ Misread
- ☐ Offset
- ☐ Out of Calibration
- ☐ Out of Sequence
- ☐ Outside Dimensions
- ☐ Ovalized
- ☐ Over/Under tolerance
- ☐ Part Incorrect
- ☐ Part Lost/Missing
- ☐ Part Moved
- ☐ Positioned Wrong
- ☐ Power Loss/Surge
- ☐ Pressure/Forced
- ☐ Temperature/Cure
- ☐ Weld
- ☐ Wrong Stock Pulled
- ☐ Other _____

Item ID: D2938-2 **Accept** *N900040100* **Setup Start** *NS1*
Revision ID: **Stop** *NS2*
Item Name: Saddle RH Out, 206

Start Date: 10/22/12 **Start Qty:** 4.00 *4* **Cust Item ID:**
Required Date: 11/09/12 **Req'd Qty:** 4.00 *4* **Customer:**
Reference:

Run Start *NR1*
Stop *NR2*

Approvals: **Process Plan:** _____ **Date:** _____ **Tooling:** _____ **Date:** _____
QC: _____ **Date:** _____ **SPC (Y/N):** _____ **Date:** _____

Sequence ID/ Work Center ID	Operation Description	Set Up/ Run Hours	Tool ID	Tool #	Plan Code	Accept Qty	Reject Qty	Reject Number	Insp. Stamp
130	QC8- Inspect parts - second check	0.00	ok 12/01/06			4	0		
130									
QC	Memo	0.00							
Quality Control									
140	Chemical Conversion Coat per QSI005 4.1	0.00				4	NG 13-1-7		
140									
HandFinish	Memo	0.00							
Hand Finishing									
150	White Gloss(Ref:4.3.5.1) per QSI005 4.3-Alum	0.00				4	ϕ KL 13-1-7		
	MB3383.								
150									
Powdercoat	Memo	0.00							
Powder Coating	START TIME: 2:30 OVEN TEMPERATURE: 390 FINISH TIME: 3:00								

DQA: _____ Date: _____

NCR: Yes / No

WORK ORDER NON-CONFORMANCE / UPDATE

QA Closed: Date:

Work Order: _____

Part No. _____

NCR No. _____

DISPOSITION

- Rework ☐
- Scrap ☐
- Use-as-is ☐
- Work Order Update ☐

AGAINST DEPARTMENT/PROCESS

- Skid-tube ☐
- Machining ☐
- Thermoforming ☐
- Large Fab ☐
- Crosstube ☐
- Small Fab ☐
- Finishing ☐
- Composite ☐
- Water Jet ☐
- Prod. Eng. Coor. ☐
- Rec/Store/Packaging ☐
- Supplier ☐
- Engineering ☐
- Quality ☐
- Other ☐

Root Cause		Date	Step	Qty	Description of work order update or Non-conformance	Initial Chief Eng	Action Description	Sign & Date	Verification	QC Inspector
Doc/Data	☐									
Equip/Tooling	☐									
Operator	☐									
Material	☐									
Setup	☐									
Other	☐									
Process	☐									
Supplier	☐									
Training	☐									
Unapproved	☐									

FAULT CATEGORY

Landing Gear

- ☐ Bending
- ☐ Centre Not Concentric to O/S
- ☐ Cracks
- ☐ Crushed/Crimped
- ☐ Cuffs
- ☐ Heat Treat
- ☐ Inspection Strip in Tube
- ☐ Ripples in Bend
- ☐ Torque Waves in Extrusion
- ☐ Turning Sequence
- ☐ Wave/Twist in Tube

General

- ☐ Bend
- ☐ BOM/Route
- ☐ Broken/Damaged
- ☐ Burrs
- ☐ Contamination
- ☐ Countersink
- ☐ Cut Too Short
- ☐ Drill Holes
- ☐ Drawing
- ☐ Finish
- ☐ Folio
- ☐ Grain
- ☐ Hardware
- ☐ Inspection Incomplete
- ☐ Instructions Incomplete/Unclear
- ☐ Maintenance
- ☐ Mislabeled
- ☐ Misread
- ☐ Offset
- ☐ Out of Calibration
- ☐ Out of Sequence
- ☐ Outside Dimensions
- ☐ Ovalized
- ☐ Over/Under tolerance
- ☐ Part Incorrect
- ☐ Part Lost/Missing
- ☐ Part Moved
- ☐ Positioned Wrong
- ☐ Power Loss/Surge
- ☐ Pressure/Forced
- ☐ Temperature/Cure
- ☐ Weld
- ☐ Wrong Stock Pulled
- ☐ Other

_____

_____

_____

Work Order ID 91962 *91962*

October-19-12 2:50:09 PM

Item ID: D2938-2 **Accept** *N900040100* **Setup Start** *NS1*

Revision ID: **Stop** *NS2*

Item Name: Saddle RH Out, 206

Start Date: 10/22/12 **Start Qty:** 4.00 *4* **Cust Item ID:**

Required Date: 11/09/12 **Req'd Qty:** 4.00 *4* **Customer:**

Reference:

Run Start *NR1*

Stop *NR2*

Approvals: **Process Plan:** _____ **Date:** _____ **Tooling:** _____ **Date:** _____

QC: _____ **Date:** _____ **SPC (Y/N):** _____ **Date:** _____

Sequence ID/ Work Center ID	Operation Description	Set Up/ Run Hours	Tool ID	Tool #	Plan Code	Accept Qty	Reject Qty	Reject Number	Insp. Stamp
160 *160* QC Quality Control	QC3- Inspect Part Finish	0.00				4x	∅	[illegible]	13/01/01
	Memo	0.00							
170 *170* Packaging Packaging	Identify as per dwg & Stock Location ST428	0.00				4x			SD 13-01-08
	Memo	0.00							
180 *180* QC Quality Control	QC21- Final Inspection - Work Order Release	0.00							
	Memo	0.00							

MF 13-01-08

DQA: _____ Date: _____

NCR: Yes / No

WORK ORDER NON-CONFORMANCE / UPDATE

QA Closed: Date:

Work Order: _____

Part No. _____

NCR No. _____

DISPOSITION

- Rework ☐
- Scrap ☐
- Use-as-is ☐
- Work Order Update ☐

AGAINST DEPARTMENT/PROCESS

- Skid-tube ☐
- Machining ☐
- Thermoforming ☐
- Large Fab ☐
- Crosstube ☐
- Small Fab ☐
- Finishing ☐
- Composite ☐
- Water Jet ☐
- Prod. Eng. Coor. ☐
- Rec/Store/Packaging ☐
- Supplier ☐
- Engineering ☐
- Quality ☐
- Other ☐

Root Cause		Date	Step	Qty	Description of work order update or Non-conformance	Initial Chief Eng	Action Description	Sign & Date	Verification	QC Inspector
Doc/Data										
Equip/Tooling										
Operator										
Material										
Setup										
Other										
Process										
Supplier										
Training										
Unapproved										

FAULT CATEGORY

Landing Gear

- ☐ Bending
- ☐ Centre Not Concentric to O/S
- ☐ Cracks
- ☐ Crushed/Crimped
- ☐ Cuffs
- ☐ Heat Treat
- ☐ Inspection Strip in Tube
- ☐ Ripples in Bend
- ☐ Torque Waves in Extrusion
- ☐ Turning Sequence
- ☐ Wave/Twist in Tube

General

- ☐ Bend
- ☐ BOM/Route
- ☐ Broken/Damaged
- ☐ Burrs
- ☐ Contamination
- ☐ Countersink
- ☐ Cut Too Short
- ☐ Drill Holes
- ☐ Drawing
- ☐ Finish
- ☐ Folio
- ☐ Grain
- ☐ Hardware
- ☐ Inspection Incomplete
- ☐ Instructions Incomplete/Unclear
- ☐ Maintenance
- ☐ Mislabeled
- ☐ Misread
- ☐ Offset
- ☐ Out of Calibration
- ☐ Out of Sequence
- ☐ Outside Dimensions
- ☐ Ovalized
- ☐ Over/Under tolerance
- ☐ Part Incorrect
- ☐ Part Lost/Missing
- ☐ Part Moved
- ☐ Positioned Wrong
- ☐ Power Loss/Surge
- ☐ Pressure/Forced
- ☐ Temperature/Cure
- ☐ Weld
- ☐ Wrong Stock Pulled
- ☐ Other

_____

_____

_____

Picklist Print

October-19-12 2:50:08 PM

Work Order ID: 91962

Parent Item: D2938-2

Parent Item Name: Saddle RH Out, 206

Start Date: 10/22/12 **Required Date:** 11/09/12

Start Qty: 4.00 **Required Qty:** 4.00

Comments: IPP: B 00.06.26 New DWG rev (mpp 2069)EC
IPP Rev:C As per Rev C 07-03-19 JLM

Component Item ID/ Item Name	Replacement Item ID	Mfg/ Purch	Bin Item	Primary Location	Last Location	Route Seq ID	Unit of Measure	Qty on Hand	Qty per Kit	Total Qty	Qty Issued	Date Issued	Status
D6101-003 Saddle Billet, 7075		Manufactured	No			100	Each	20.0000	1	4	PO	12/12/31	

Location	Loc Qty	Loc Code	
MAT040	26		
73775	2		
73780	7		
78599	10		
80765	0		
MAT042	-7		
MAT044	1		
73769	1		

91238 2

92531 2

DQA: _____ Date: _____

NCR: Yes / No

WORK ORDER NON-CONFORMANCE / UPDATE

QA Closed: Date:

Work Order: _____

Part No. _____

NCR No. _____

DISPOSITION

- Rework ☐
- Scrap ☐
- Use-as-is ☐
- Work Order Update ☐

AGAINST DEPARTMENT/PROCESS

- Skid-tube ☐
- Machining ☐
- Thermoforming ☐
- Large Fab ☐
- Crosstube ☐
- Small Fab ☐
- Finishing ☐
- Composite ☐
- Water Jet ☐
- Prod. Eng. Coor. ☐
- Rec/Store/Packaging ☐
- Supplier ☐
- Engineering ☐
- Quality ☐
- Other ☐

Root Cause		Date	Step	Qty	Description of work order update or Non-conformance	Initial Chief Eng	Action Description	Sign & Date	Verification	QC Inspector
Doc/Data	☐									
Equip/Tooling	☐									
Operator	☐									
Material	☐									
Setup	☐									
Other	☐									
Process	☐									
Supplier	☐									
Training	☐									
Unapproved	☐									

FAULT CATEGORY

Landing Gear

- ☐ Bending
- ☐ Centre Not Concentric to O/S
- ☐ Cracks
- ☐ Crushed/Crimped.
- ☐ Cuffs
- ☐ Heat Treat
- ☐ Inspection Strip in Tube
- ☐ Ripples in Bend
- ☐ Torque Waves in Extrusion
- ☐ Turning Sequence
- ☐ Wave/Twist in Tube

General

- ☐ Bend
- ☐ BOM/Route
- ☐ Broken/Damaged
- ☐ Burrs
- ☐ Contamination
- ☐ Countersink
- ☐ Cut Too Short
- ☐ Drill Holes
- ☐ Drawing
- ☐ Finish
- ☐ Folio
- ☐ Grain
- ☐ Hardware
- ☐ Inspection Incomplete
- ☐ Instructions Incomplete/Unclear
- ☐ Maintenance
- ☐ Mislabeled
- ☐ Misread
- ☐ Offset
- ☐ Out of Calibration
- ☐ Out of Sequence
- ☐ Outside Dimensions
- ☐ Ovalized
- ☐ Over/Under tolerance
- ☐ Part Incorrect
- ☐ Part Lost/Missing
- ☐ Part Moved
- ☐ Positioned Wrong
- ☐ Power Loss/Surge
- ☐ Pressure/Forced
- ☐ Temperature/Cure
- ☐ Weld
- ☐ Wrong Stock Pulled
- ☐ Other _____

DART AEROSPACE LTD	Work Order:	91962
Description: 206 Saddle, Outboard, Right side	Part Number:	D2938-2
Inspection Dwg: D2938 Rev. C		Page 1 of 1

Inspect dimensions highlighted on inspection sheet drawing D2938 Rev. C and record below:

				Recorded Actual Dimensions					
Dim	Min	Max	Go/No Go Gauge	1	2	3	4	By	Date
A	0.100	0.140		.106	106	.106	.106		
B	0.100	0.140		.110	.108	.107	.107		
C	0.100	0.140		.114	.112	.112	.114		
D	0.210	0.230		.222	.221	.219	.218		
E	1.245	1.255		1.250	1.250	1.250	1.250		
F	1.245	1.255		1.250	1.250	1.250	1.250		
G	2.495	2.505		2.500	2.500	2.500	2.500		
H	0.510	0.515		.512	.512	.512	.512		
I	1.572	1.582		1.577	1.577	1.577	1.577		
J	2.495	2.505		2.500	2.500	2.500	2.500		
K	0.257	0.262		.258	.258	.258	.258		
L	0.312	0.317		.314	.314	.314	.314		
M	0.235	0.240		.237	.237	.237	.237		
N	0.100	0.140		.121	.120	.118	.117		
O	0.540	0.560		.550	.550	.550	.550		
P	0.490	0.510		.498	.499	.500	.500		
Q	3.715	3.725		3.720	3.720	3.720	3.720		
R	2.720	2.760		2.738	2.738	2.738	2.738		
S	0.240	0.270		.251	.250	.250	.250		
T	0.100	0.180		.135	.135	.135	.135		
U	1.625	1.635		1.630	1.630	1.630	1.630		
V	1.362	1.372		1.367	1.367	1.367	1.367		
W	0.316	0.321		.316	.316	.316	.316		
X	1.250	1.270		1.260	1.261	1.259	1.258		
Y	1.565	1.585		1.574	1.575	1.573	1.572		
Z	0.178	0.198		.188	.188	.188	.188		
AA									
AB									
AC									
AD									
AE									
AF									
AG									
AH									
Accept/Reject									

Measured by:	PD
Date:	13/01/04

Audited by	
Date:	13/01/04

Rev	Date	Change	Revised by	Approved
A		New Issue	RF	
B	02.12.12	Reformat; Added Dim. X-Y, DT8683, DT8686, DT8690	KJ/RF	
C	07.03.21	Revised per drawing revision C	KJ/JLM	

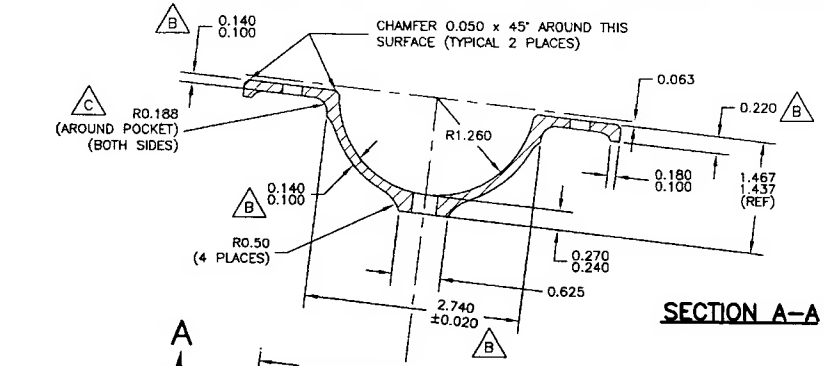

SECTION A–A

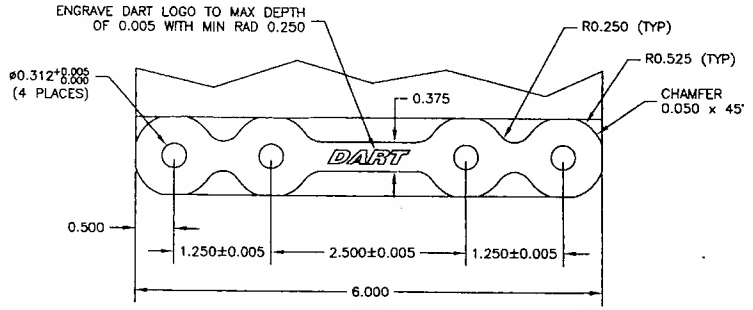

VIEW C–C

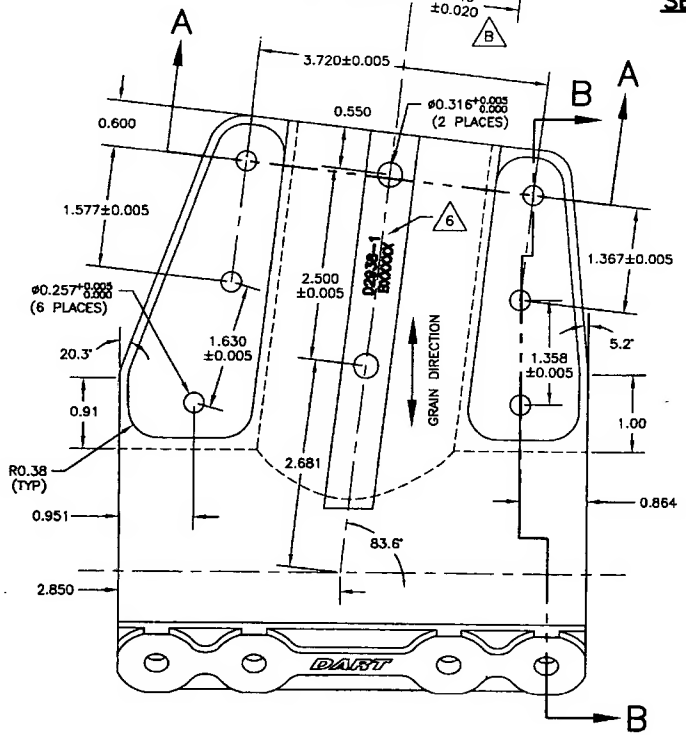

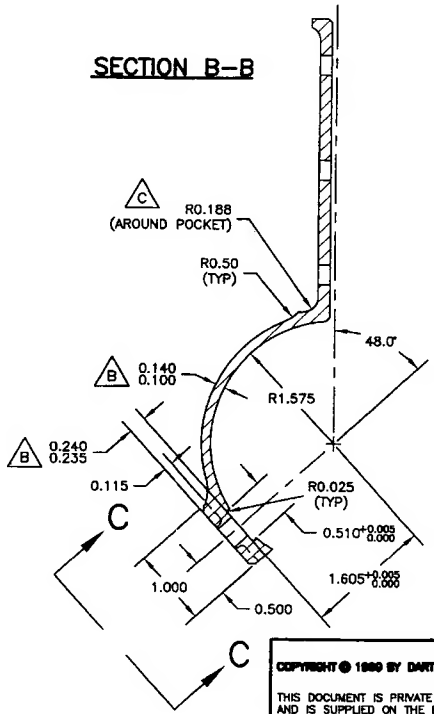

D2938–1 LH SADDLE (SHOWN)

D2938–2 RH SADDLE (OPPOSITE)

NOTES:

1) MATERIAL: ALUMINUM 7075–T7351 (QQ–A–250/12) (MAKE FROM D6101–003 SADDLE BILLET, 7075)
2) FINISH: CHEMICAL CONVERSION COAT PER DART QSI 005 4.1 POWDER COAT GLOSS WHITE (REF 4.3.5.1) PER DART QSI 005 4.3
3) BREAK ALL SHARP EDGES 0.010 TO 0.020
4) TOLERANCES ARE PER DART QSI 018 UNLESS OTHERWISE NOTED
5) ALL DIMENSIONS ARE IN INCHES
6) ENGRAVE PART AND BATCH NUMBER IN THIS AREA 0.010 TO 0.015 DEEP

C	06.11.09	R0.188 WAS R0.30 TO R0.25
B	00.05.29	CHANGED GEOMETRY AND MATERIAL
A	99.11.12	NEW ISSUE

COPYRIGHT © 1999 BY DART AEROSPACE USA, INC.
THIS DOCUMENT IS PRIVATE AND CONFIDENTIAL AND IS SUPPLIED ON THE EXPRESS CONDITION THAT IT IS NOT TO BE USED FOR ANY PURPOSE OR COPIED OR COMMUNICATED TO ANY OTHER PERSON WITHOUT WRITTEN PERMISSION FROM DART AEROSPACE USA, INC.

DESIGN	DRAWN BY	DART AEROSPACE USA, INC. BELLEVUE, WA	
CHECKED	APPROVED	DRAWING NO.	REV. C
DATE		D2938	SHEET 1 OF 1
06.11.09		TITLE: SADDLE OUTSIDE	SCALE: 2:3

RELEASED
07.02.12

SHOP COPY
RETURN TO
ENGINEERING
UNCONTROLLED COPY
SUBJECT TO CHANGE
WITHOUT NOTICE
WORK FROM
NC 91962 MCS 12-16-22